detail 3

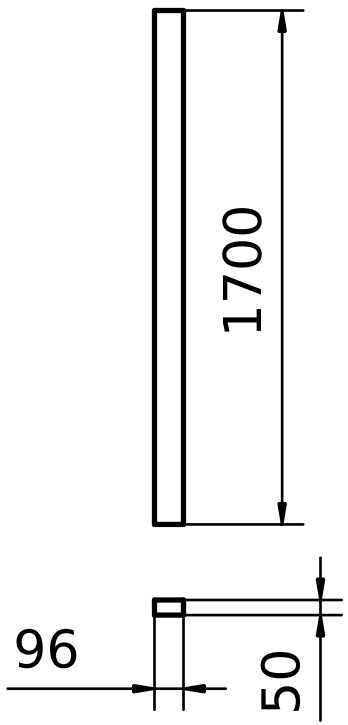

detail 1

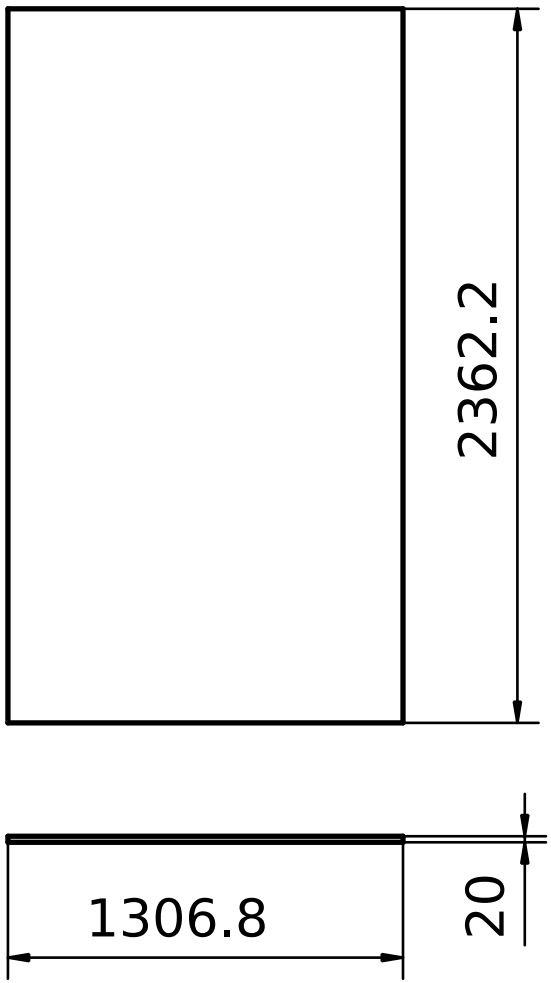

detail 2

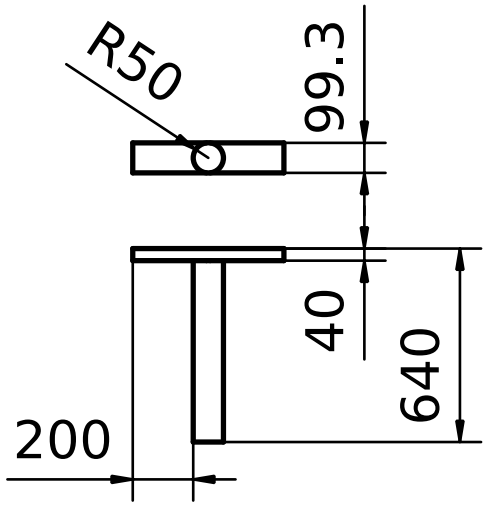

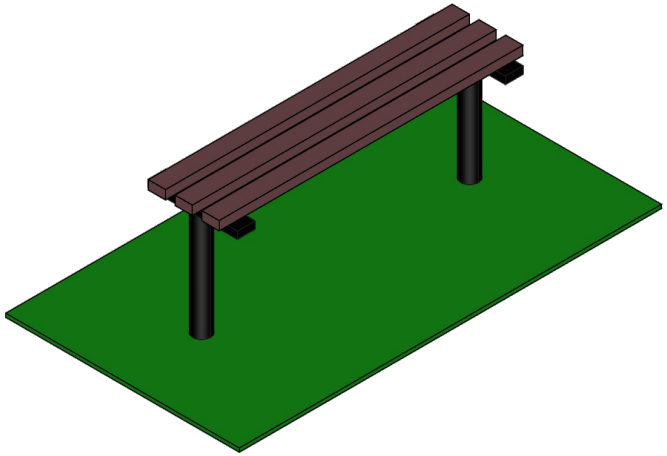

To assemble the swing you will need:
1. detail 1 one pieces
2. detail 2 two pieces
1. detail 3 three pieces

DESIGNED BY: HiEngeener DATE: 18.11.2025		The 3D model of the bench	
SIZE A4			
SCALE 1 : 25	WEIGHT (kg)	DRAWING NUMBER 44	SHEET

This drawing is our property; it can't be reproduced or communicated without our written consent.